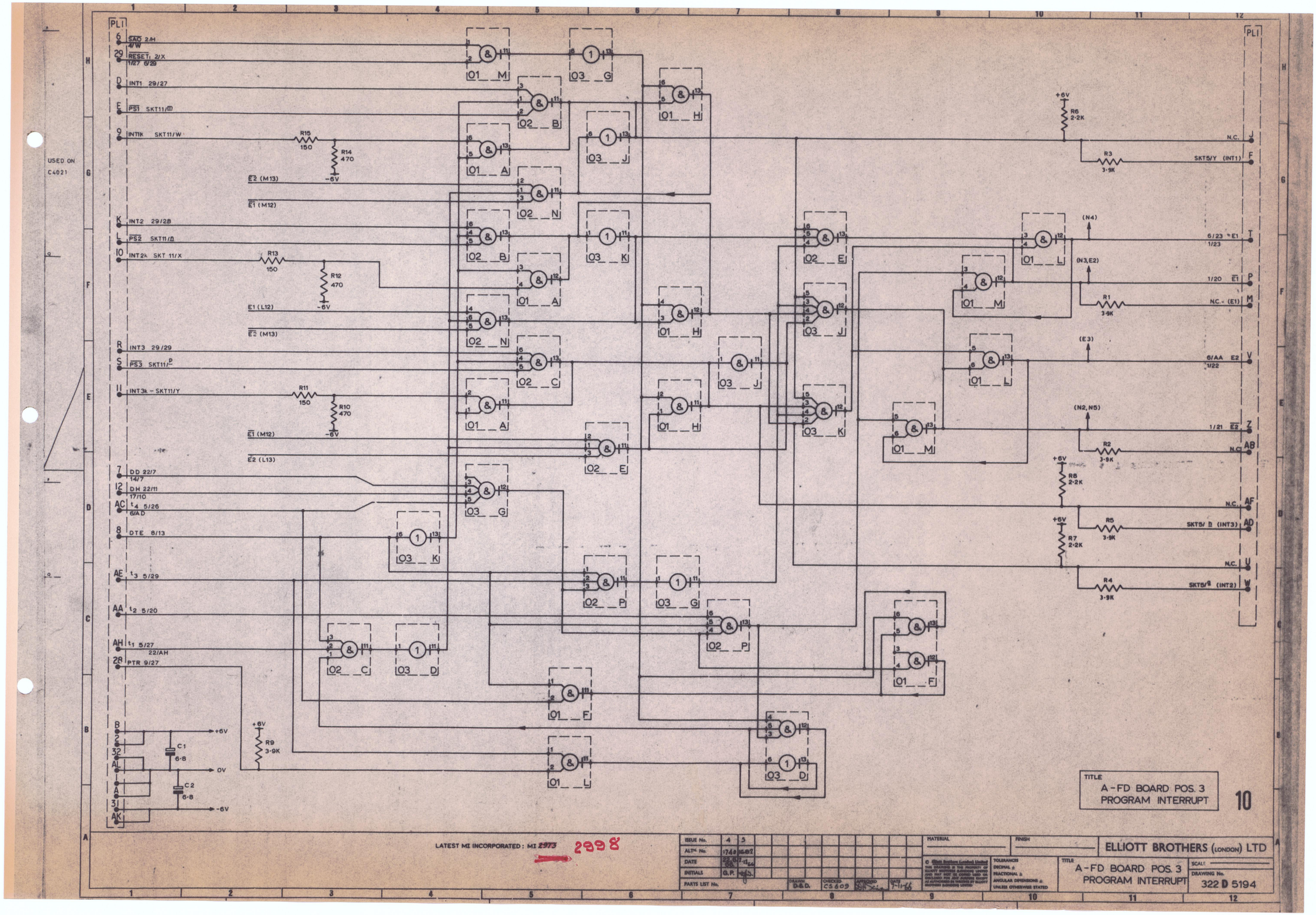

PL1
SAO 2/H 4/W
RESET 2/X 1/27 6/29
INT1 29/27
PS1 SKT11/m
INT1k SKT11/W
INT2 29/28
PS2 SKT11/n
INT2k SKT 11/X
INT3 29/29
PS3 SKT11/p
INT3k - SKT11/Y
DD 22/7 14/7
DH 22/11 17/10
t4 5/26 6/AD
DTE 8/13
t3 5/29
t2 5/20
t1 5/27 22/AH
PTR 9/27
USED ON C4021
R15 150
R14 470
R13 150
R12 470
R11 150
R10 470
R9 3·9K
C1 6·8
C2 6·8
+6V
0V
-6V
R6 2·2K
R3 3·9K
R1 3·9K
R2 3·9K
R8 2·2K
R5 3·9K
R7 2·2K
R4 3·9K
N.C.
SKT5/Y (INT1)
6/23 E1 1/23
1/20 E1
N.C. (E1)
6/AA E2 1/22
1/21 E2
SKT5/n (INT3)
SKT5/q (INT2)
(N4)
(N3,E2)
(E3)
(N2,N5)
TITLE
A-FD BOARD POS. 3
PROGRAM INTERRUPT
10
LATEST MI INCORPORATED: MI 2973
2998
ISSUE No. 4 5
ALTN No. 1740 1682
DATE 22.6.66 7-11-66
INITIALS G.P.
PARTS LIST No.
DRAWN D.&D.
CHECKED CS609
APPROVED
DATE 7-11-66
MATERIAL
FINISH
ELLIOTT BROTHERS (LONDON) LTD
TOLERANCES
DECIMAL ±
FRACTIONAL ±
ANGULAR DIMENSIONS ±
UNLESS OTHERWISE STATED
TITLE
A-FD BOARD POS. 3
PROGRAM INTERRUPT
SCALE
DRAWING No.
322 D 5194